NOTE:
FOR OIL LEVEL SWITCH LOCATION ,SEE DWG. 400/10

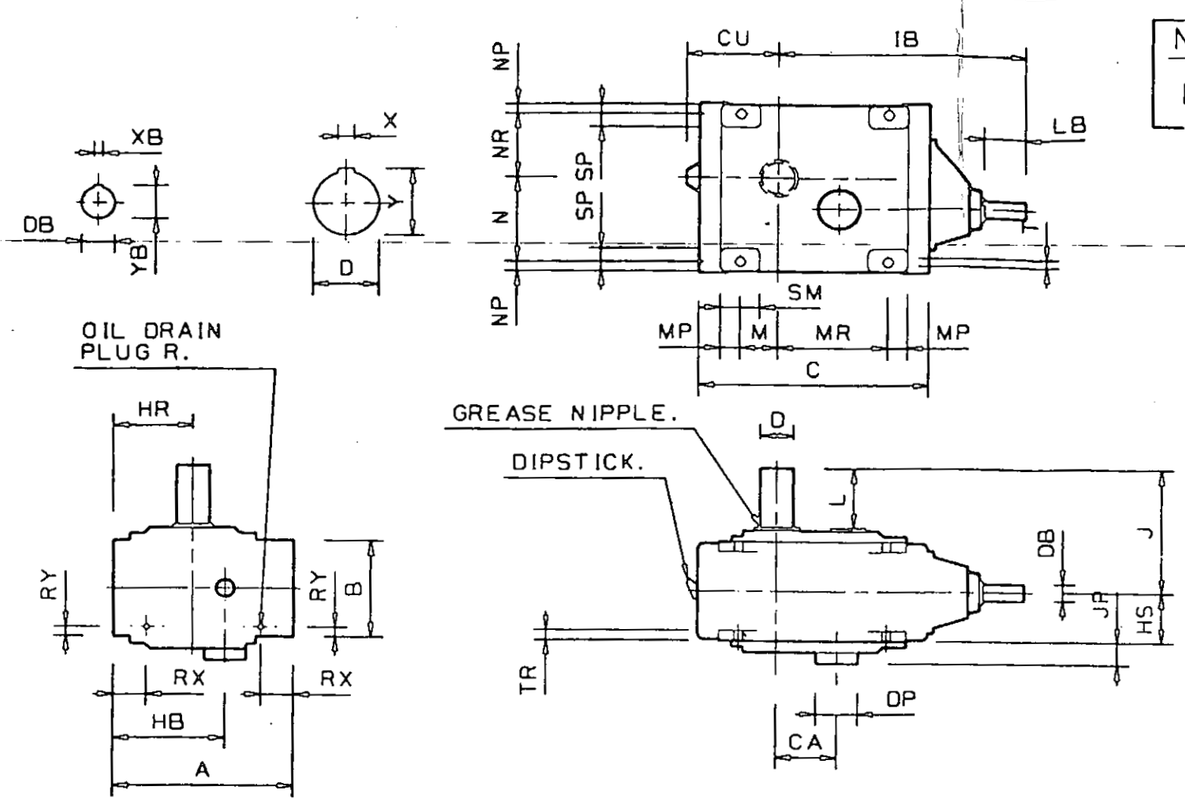

AS BUILT

A	B	C	CU	HB	HR	HS	IB	J	M	MP	MR
600	350	755	305	372	265	175	819	435	125	65	360
N	NP	NR	SP	SM	T	TR	D m6	L	X	Y	DB m6
295	33	225	80	130	28	35	110	210	28	116	60
LB	XB	YB	R	RX	RY	CA	DP	JP			
140	18	64	3/4"	110	33	199	137	79			

MOTOR

POWER: 90/15 KW
SPEED: 1500/750 RPM

FAN

SPEED: 133,3RPM
WEIGHT: 799KG
PR2: 1468Kgm^2
COUPLING WEIGHT: 160KG
AXIAL FORCE: 500KG

FOR THIS ORDER 8 GEARBOXES ARE REQUIRED.
TYPE: RND 24 BNN.

WITH OIL LEVEL SWITCH "KOBOLD" SIZE NBA-10.00
(INSTALL OUTSIDE FAN RING)

RATIO: 11.066
OIL CAPACITY: 22L
WEIGHT: 540 Kg

PROTECTION:
INPUT,OUTPUT SHAFT: VARNISH COUNTER RUST
BOX: E3 (SEE SPECIFICATION 600/00)

CONFIRMED DOCUMENT

RESULT OF JGC'S REVIEW — JOB No. 0 6000

- ☐ REVIEWED WITHOUT COMMENT
- ☐ COMMENTED AS MARKED RESUBMISSION FOR FURTHER REVIEW IS
- ☐ NECESSARY BY ( )
- ☐ NOT NECESSARY

REVIEWED BY | DATE
DEPT.
Name & Sign

NIOC DOC. No. PO 06 - 1075 - DW055 - 3

JV(JGC) DOC. No. — PURCHSE ORDER No. V215A301A — SERIAL 055 — SIZE A3 — REV. 3

REV.	DATE	INIT	PAR	INIT	PAR	INIT	PAR	CODE	REMARKS
		DRAWN		CHECK		APPR.			
02	31/08/93	DBK		DBK					AS BUILT
01	04/04/91	DEB		LEB					REV.A BECOMES REV.01 & ADDED NOTE
A	16/01/91	DEB		JNH					OIL LEVEL SWITCH REMOVED
0	19/11/90	DEB		LEB					

PLANT: NATIONAL IRANIAN OIL COMPANY-IRAN
ARAK REFINERY
ITEM N°. CT-2204 A/B-FA-1A/B/C/D

SCALE: NONE — SIZE: A3

INDUCED DRAFT COOLING TOWER
GEARBOX H.T.I.
TYPE : RND 24

FILE: HBC3642

HAMON-SOBELCO S.A.
HAMON COOLING TOWER DIVISION
RUE CAPOUILLET,50-58
1060 BRUXELLES-TELEX:21822B SOBHAM B.
TF : 02/535.12.11

CT 2204 A/B

THIS DRAWING IS OUR PROPERTY. IT SHALL BE TREATED AS CONFIDENTIAL AND MUST NOT BE USED TO OUR DISADVANTAGE. IT SHALL BE NEITHER REPRODUCED NOR MADE AVAILABLE TO THIRD PARTIES WITHOUT OUR CONSENT. WE RESERVE THE RIGHTS ON ALL PATENTS GRANTED AND ON THE KNOW-HOW CONTAINED IN THIS DRAWING.

DRAWING No: 400/04 — REV. 02

HBC3642 400/04 02
REV 01 2

PART NAME : C.HBC364200.400.04

DRAWING BY COMPUTER GRAPHIC EQUIPMENT

D: 4428

416

Hansen Power A/S

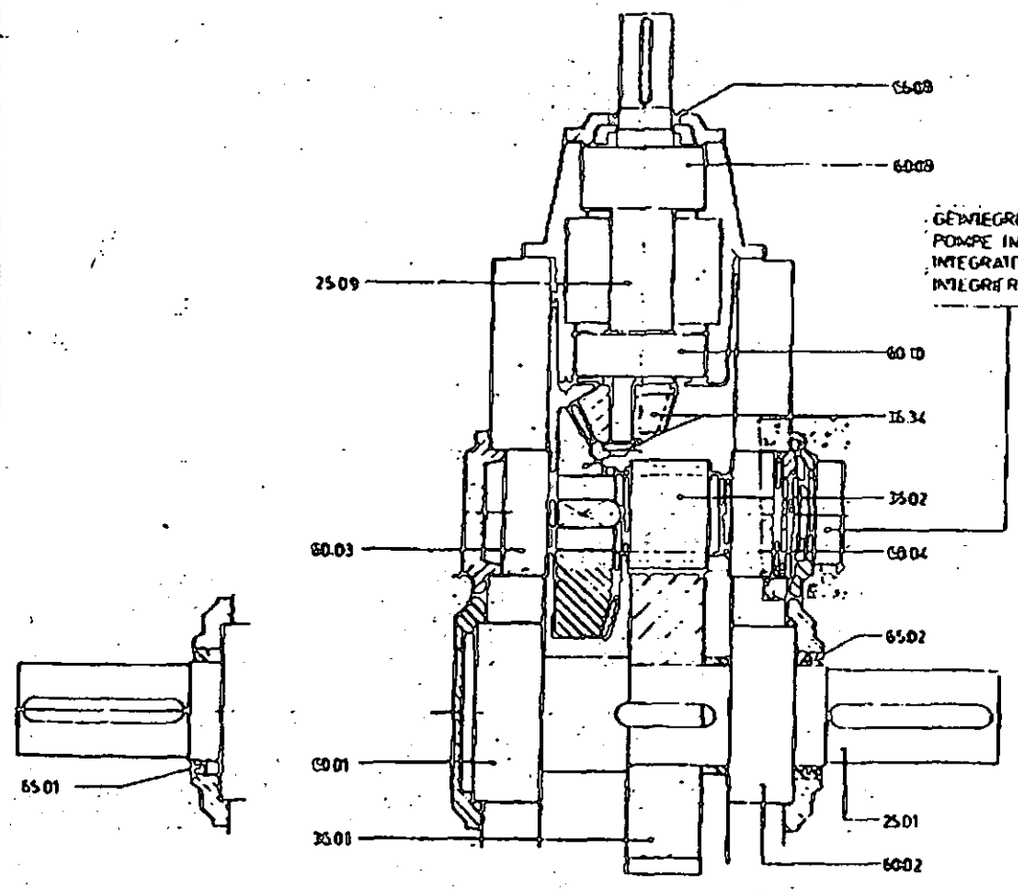

2501	1	LOW SPEED SHAFT		
3601	1	LOW SPEED GEAR c/w SPACER		
3602	1	LOW SPEED PINION SHAFT		
3634	1	BEAR GEAR NUT		
6001	1	SPHERICAL ROLLER BEARING	1	
6002	1	"		
6003	1	"		
6004	1	" THRUST BRG		
6009	2	TAPERED ROLLER BRG		
6010	1	SPHERICAL ROLLER BRG		
6501	1	OIL SEAL c/w DUST LIP		
6509	1	"		

Pos N° / Pos N°	Qt	Benaming / Dénomination / Denomination / Benennung	Onderdeel N° / N° de pièce / Part N° / Stück N°	Prijs/stuk / Prix unitaire / Price/piece / Preis/stück

WISSELSTUKKEN - SPARE PARTS
PIECES DE RECHANGE - ERSATZTEILE

TYPE RND24- BNN-11.2

TOTAL P.02

JEC CORPORATION

DATA SHEET

No.

SHEET 1 OF 1

DATE 25 _ APR _ 91

SPECIAL-PURPOSE GEAR

1	Client HAMON-SOBELCO	Project ARAK REFINERY IRAN		Item No.	
2	Unit	Service			
3	No. required : 8	Guar. Noise Level : dB(A)	Manufacturer : HANSEN TRANSMISSION INTERNATIONAL	Mfr's Model	RND24
4	Type : RND24-BNN-11,2			Serial No.	R04A 148060/
5	Driven Equipment Item No. :		Type of Driver : ELEC. MOTOR		

	RATING REQUIREMENT		CONSTRUCTION FEATURES		
6					
7	Driven Equipment BHP Nor./Max. kW, HP	71.4	Type of Gear	☐ Horizontal	☒ Vertical
8	Driver BHP Rated/Nor. kW, HP	90/15		☐ Single	☒ Double Stage
9	Gear Rated HP kW, HP	225 kW		☒ Single	☐ Double Helical
10	Torque @ MCR ~~kg-m-lb-ft~~	16.2 kNm		☐ Epicyclic	☒ Bevel
11	Max. Torque @ Speed kg-m,lb-ft/rpm	/	Tooth :		
12	Rated Input Speed ☐ Spec. ☒ Nom. rpm	1480/740	No. of Teeth Pinion, Gear		16 / 70
13	Rated Output Speed ☐ Spec ☐ Nom. rpm	133	Gear Ratio		4,3750
14	Allowable Variation in Gear Ratio ± %	± 3%	Center Distance mm,in.		226 mm
15	Max. Continuous Speed rpm	1500	Pitch Dia. Pinion/Gear mm,in.		80,8 mm / 353,4 mm
16	Trip Speed rpm	N/A	Finish RMS		
17	Service Factor(minimum) ☐ API ☒ AGMA	2,91	AGMA Geom. Factor "J"		0,597
18	Rotation from Coupling End HS/LS	CW / CW	Helix Angle deg.		8
19	Shaft End Cylindrical/Taper	CYLINDRICAL	Normal Press. Angle deg.		20
20	Flanged/Keyed (1) (2)	KEYED (1)	Net Face Width "F" mm,in.		85 mm
21	Shaft Assembly Designation(API 2.1.16)	N/A	Pinion L/d		1.05
22			Normal Dia. Pitch "Pnd" mm,in.		mn = 5 mm
23	BASIC GEAR DATA		Backlash mm,in.		0,2 mm - 0,3 mm
24	Mechanical Rating @ Speed kW, HP/rpm	225 kW / 1500	Tooth Plating		N/A
25	Full Load HP ~~kW~~ kW HP	71.4	Manufacturing Method :		
26	Mechanical Efficiency %	97,5 %	Tooth generation Process		HOBBING
27	Pitch Line Velocity m/sec. fpm	2,6 m/sec	Tooth Finish Process		GRINDING
28	Tooth Pitting Index "K" Act./Allow.		Tooth Hardening Method		CARBURISING
29	Tangential Load "Wt" kg,lb		Gear to Shaft Integ./Shrunk-on		INTEGRAL
30	Bending Stress No. "St"		Rim Attachment		
31	Pinion Act./Allow.	N/A /	Radial Bearing :	Pinion	Gear
32	Gear Act./Allow.	N/A /	Type	TAPER	SPHERICAL
33	Material Index No.		Dia x Length mm,in.	N/A	N/A
34	Journal Static Weight Load Pinion kg,lb		Loading kg/cm², Psi	N/A	N/A
35	Gear kg,lb		Span mm,in.	N/A	N/A
36	Residual Unbalance Pinion kg,lb		Thrust Bearing : Location	N/A	
37	Gear kg,lb		Type	N/A	
38	WR² ref. to LS Shaft kg-m²,lb-ft²	8,57 kg m²	Manufacturer	N/A	
39	Breakaway Torque @ LS Shaft kg-m,lb-ft	N/A	Size/Area mm/mm², in./in²	N/A /	
40			Load Act./Allow kg/cm², psi	N/A /	
41	ACCESSARIES		Internal Loads kg,lb	N/A	
42	☐ Gear Baseplate	☐ Thermometers on Brg's	External Loads kg,lb	N/A	
43	☐ Common Baseplate	☐ Radial Position Detectors	Matl : Gear Casing	GG25 (DIN 1691)	
44	☐ Adjusting Screws	☐ Axial Position Detectors	Shaft LS/HS	42CrMo4 / 17CrNiMo6	
45	☐ Filter/Breather	☐ Rotor Response Analysis	Pinion/Hardness	670-760 HV	
46	☐ Purge Connection	☐ Gear Rotor Spare	Gear Rim/Hardness	N/A /	
47	☐ Thermocouple/RTD	☐	Oil System : Furnished by	HAMON-SOBELCO	
48	WEIGHT	TEST/INSPECTION	Applicable Standard	HAMON STANDARD	
49	Gear kg,lb 550 kg	☒ Mechanical Running Test	Prelub. by Manual/Auto.	MANUAL	
50	Auxiliary kg,lb N/A	☐ W. Job Lube System	No. of Unit Cooler/Filter	N/A	
51	Max. Maint. kg,lb 550 kg	☐ W. Job Probes/Monitors	No. of L/O Pump	N/A	
52	Painting ☒ Mfr's Standard	☐ W. Full Load & Full Speed	Piping Material	H.D.G.S.	
53	☐	☐ Disassembly			

54 Remarks : Unless otherwise specified, latest API 613 shall govern.

55

56

FRONT VIEW

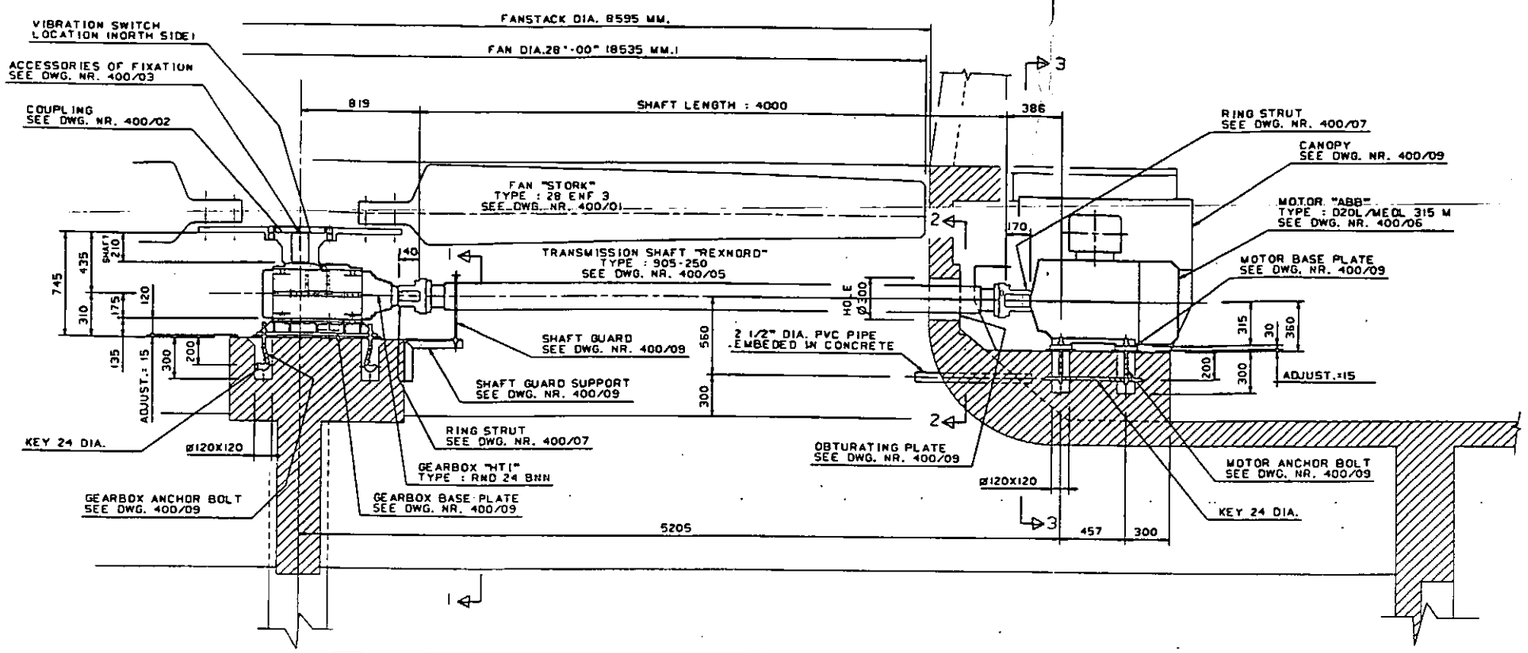

NOTE: VIBRATION SWITCH ,SEE DWG. 400/08
VIBRATION SWITCH SUPPORT ,SEE DWG. 400/09
VIBRATION SWITCH LOCATION ,SEE DWG. 400/10

SECTION 1-1

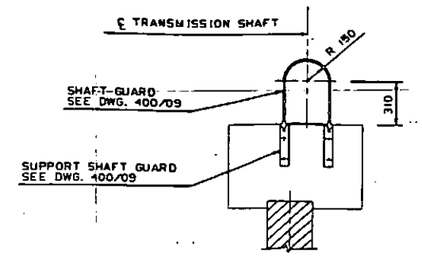

SECTION 2-2

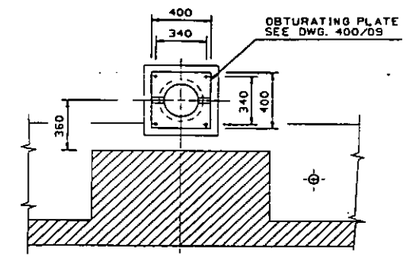

SECTION 3-3

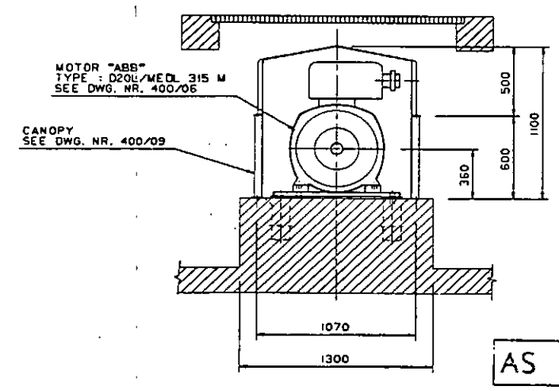

AS BUILT

PLAN SECTION

MECHANICAL EQUIPMENT NOT SHOWN FOR CLARITY

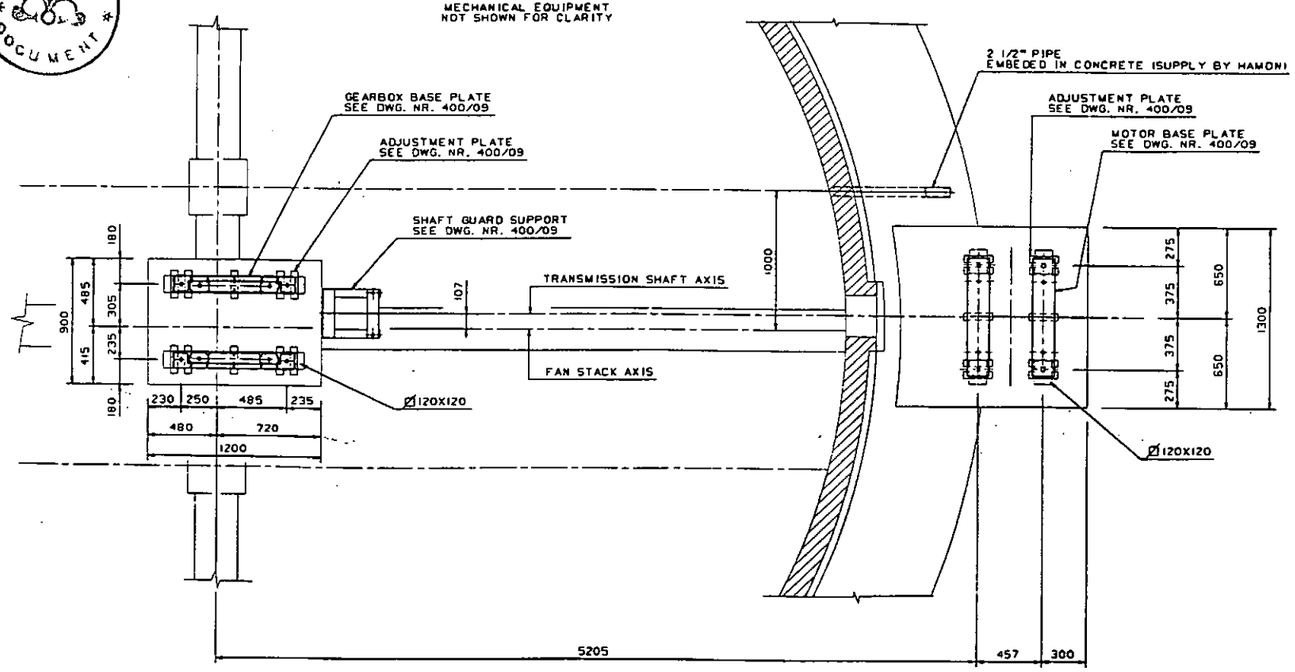

GEARBOX LUBRICATION PIPES : SEE DWG. NR. 400/10

CONFIRMED DOCUMENT

RESULT OF JGC'S REVIEW	JOB No. 0 610010
☐ REVIEWED WITHOUT COMMENT ☐ COMMENTED AS MARKED RESUBMISSION FOR FURTHER REVIEW IS ☐ NECESSARY BY ( ) ☐ NOT NECESSARY	REVIEWED BY / DATE DEPT. Name & Sign

NIOC DOC. No. PO 06-1075-DW051

JV(JGC) DOC. No. V-2115A-301-A051-A1 (PURCHASE ORDER No. / SERIAL / SR / REV.)

REV.	DATE	DRAWN INIT	DRAWN PAR	CHECK INIT	CHECK PAR	APPR. INIT	APPR. PAR	CODE	REMARKS
03	31/8/93	DBK		DBK					AS BUILT
02	21/06/93	DEB		JNH					REV. LOCATION VIBRATION SWITCH
01	04/04/91	DEB		JNH					REV.A DECDWES REV.01 - REMOVE VIBRATION SWITCH - ADDED NOTE
A	16/01/91	DEB		JNH					REV. A
0	13/12/90	DEB		LEB					

PLANT: NATIONAL IRANIAN OIL COMPANY-IRAN, ARAK REFINERY, ITEM N°. CT-2204 A/B-FA-1A/B/C/D

SCALE 1/20 — SIZE A1

INDUCED DRAFT COOLING TOWER
MECHANICAL PART
GENERAL ARRANGEMENT

FILE HBC3642

HAMON-SOBELCO S.A.
HAMON COOLING TOWER DIVISION, RUE CAPOUILLET 90-50, 1050 BRUXELLES-TELEX 21022B SOBHAM B. TF : 02/535.12.11

CT-2204 A/B

THIS DRAWING IS OUR PROPERTY. IT SHALL BE TREATED AS CONFIDENTIAL AND MUST NOT BE USED TO OUR DISADVANTAGE. IT SHALL BE NEITHER REPRODUCED NOR MADE AVAILABLE TO THIRD PARTIES WITHOUT OUR CONSENT. WE RESERVE THE RIGHTS ON ALL PATENTS STATED AND ON THE INFORMATION CONTAINED IN THIS DRAWING.

DRAWING No. 400/00 — REV. 03

HBC3642 | 400/00 | MECHANICAL PART | 03

DRAWING BY COMPUTER GRAPHIC EQUIPMENT

PART NAME : C.HBL — J.400.00

442 — 10cm

n: 4428

SECTION I-I.

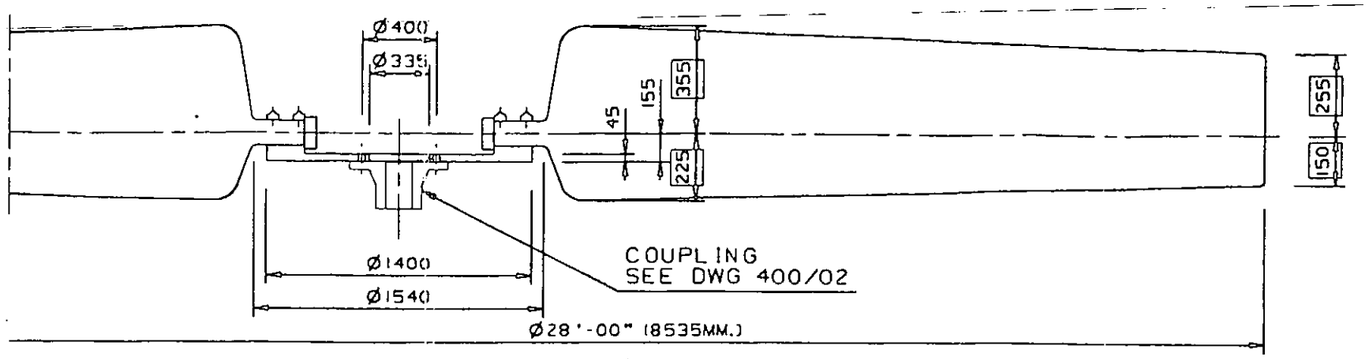

DIMENSIONS FOR PITCH ANGLE=30°.

PLAN VIEW.

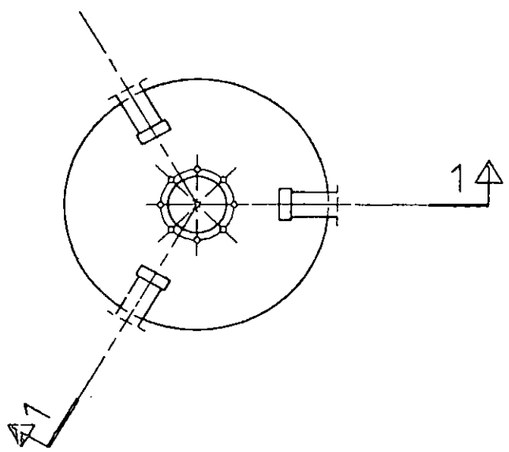

FOR THE ORDER 8 FANS ARE REQUIRED.

TYPE: 28 ENF 3

MATERIAL : HUB ST37-2 (ASTM A 570 GR.36)
BLADES F.R.P.

PROTECTION : HUB : HOT DIP GALVANIZED (ASTM A 123)
BLADES LEADING EDGES OF BLADES PROTECTED AGAINST EROSION
HARDWARE : HOT DIP GALVANIZED (ASTM A 153)

AS BUILT

CONFIRMED DOCUMENT

RESULT OF JGC'S REVIEW	JOB No. 0 6 0 0 0
☐ REVIEWED WITHOUT COMMENT ☐ COMMENTED AS MARKED RESUBMISSION FOR FURTHER REVIEW IS ☐ NECESSARY BY ( ) ☐ NOT NECESSARY	REVIEWED BY / DATE DEPT. Name & Sign

NIOC DOC. No. PO 06 - 1075 - DW052 - 3

JV(JGC) DOC. No. V-215A-301-A-052-A3-3 (PURCHSE ORDER No. / SERIAL / SIZE / REV.)

REV.	DATE	DRAWN INIT	DRAWN PAR	CHECK INIT	CHECK PAR	APPR. INIT	APPR. PAR	CODE	REMARKS
02	31/08/93	DBK		DBK					AS BUILT
01	04/04/91	DEB		LEB					REV.A BECOMES REV.01 · REV. MATERIAL
A	16/01/91	DEB		JNH					REV. PROTECTION
0	20/11/90	DEB		LEB					

PLANT: NATIONAL IRANIAN OIL COMPANY-IRAN
ARAK REFINERY
ITEM N°. CT-2204 A/B-FA-1A/B/C/D

INDUCED DRAFT COOLING TOWER
FAN STORK
28 ENF 3

SCALE: NONE
SIZE: A3
FILE: HBC3642
CT 2204 A/B

HAMON-SOBELCO S.A.
HAMON COOLING TOWER DIVISION
RUE CAPOUILLET,50-58
1060 BRUXELLES-TELEX:21822B SOBHAM B.
TF : 02/535.12.11

THIS DRAWING IS OUR PROPERTY. IT SHALL BE TREATED AS CONFIDENTIAL AND MUST NOT BE USED TO OUR DISADVANTAGE. IT SHALL BE NEITHER REPRODUCED NOR MADE AVAILABLE TO THIRD PARTIES WITHOUT OUR CONSENT. WE RESERVE THE RIGHTS ON ALL PATENTS GRANTED AND ON THE KNOW-HOW CONTAINED IN THIS DRAWING.

DRAWING No: 400/01
REV.: 02

DRAWING BY COMPUTER GRAPHIC EQUIPMENT

PAR. NAME : C.HBC364200.400.01

HBC3642 400/01 02
REV 01 2

4/3

D: 4428

27

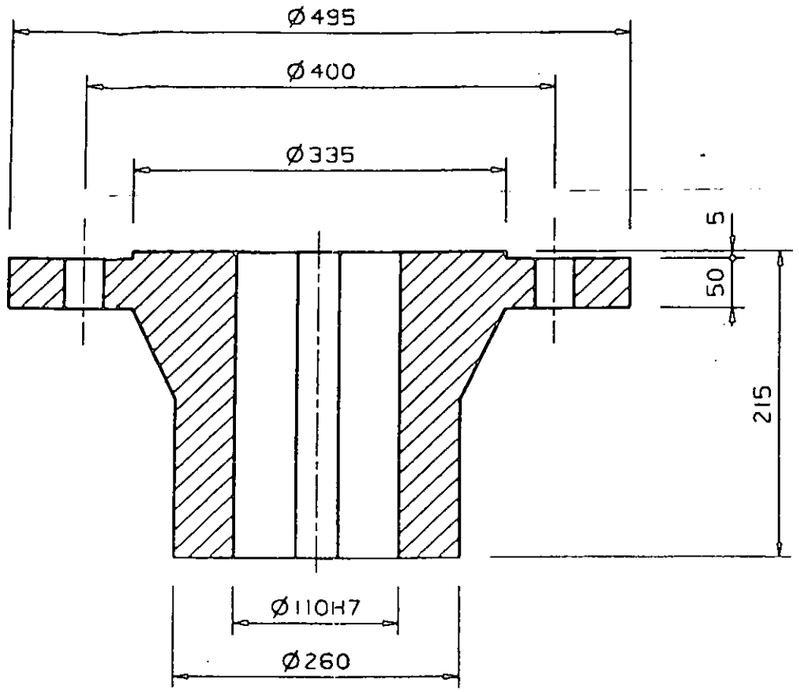

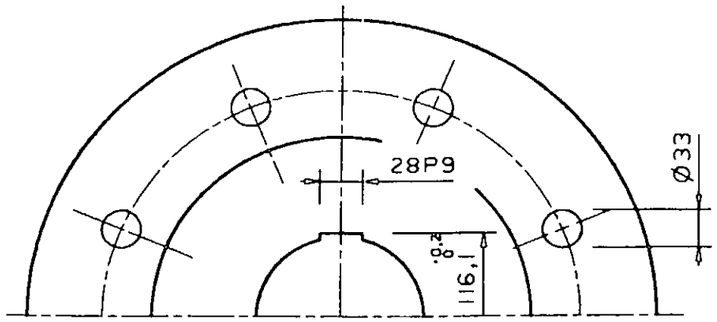

FOR THE ORDER 8 COUPLINGS ARE REQUIRED.
TYPE: 335

MATERIAL: ASTM A48-76 CAT.2
PROTECTION: MACHINED FACES VARNISH COUNTER RUST
OTHER FACES : HOT DIP GALVANIZED

PART NAME : C.HBC364200.400.02

CONFIRMED DOCUMENT

AS BUILT

RESULT OF JGC'S REVIEW	JOB No. 0 6000
☐ REVIEWED WITHOUT COMMENT ☐ COMMENTED AS MARKED RESUBMISSION FOR FURTHER REVIEW IS ☐ NECESSARY BY ( ) ☐ NOT NECESSARY	REVIEWED BY / DATE DEPT. Name & Sign

NIOC DOC. No.	PO 06 - 1075 - DW053 - 3
JV(JGC) DOC. No.	V 215A 301 A 053 A3 3 (PURCHSE ORDER No. / SERIAL / SIZE / REV.)

REV.	DATE	INIT	PAR	INIT	PAR	INIT	PAR	CODE	REMARKS
		DRAWN		CHECK		APPR.			
02	31/08/93	DBK		DBK					AS BUILT
01	04/04/91	DEB		LEB					REV.A BECOMES REV.01 · ADDED ITEM N°
A	23/01/91	DEB		JNH					REV. PROTECTION
0	18/10/90	DEB		LEB					

PLANT: NATIONAL IRANIAN OIL COMPANY-IRAN
ARAK REFINERY
ITEM N°. CT-2204 A/B-FA-1A/B/C/D

INDUCED DRAFT COOLING TOWER
FAN COUPLING (STORK)
TYPE : 335

SCALE: NONE
SIZE: A3
FILE: HBC3642
CT-2204 A/B

HAMON-SOBELCO S.A.
HAMON COOLING TOWER DIVISION
RUE CAPOUILLET,50-58
1060 BRUXELLES-TELEX:21822B SOBHAM B.
TF : 02/535.12.11

THIS DRAWING IS OUR PROPERTY. IT SHALL BE TREATED AS CONFIDENTIAL AND MUST NOT BE USED TO OUR DISADVANTAGE. IT SHALL BE NEITHER REPRODUCED NOR MADE AVAILABLE TO THIRD PARTIES WITHOUT OUR CONSENT. WE RESERVE THE RIGHTS ON ALL PATENTS GRANTED AND ON THE KNOW-HOW CONTAINED IN THIS DRAWING.

DRAWING No: 400/02
REV.: 02

HBC364200 400/02 REV 01 2

DRAWING BY COMPUTER GRAPHIC EQUIPMENT

D: 4428

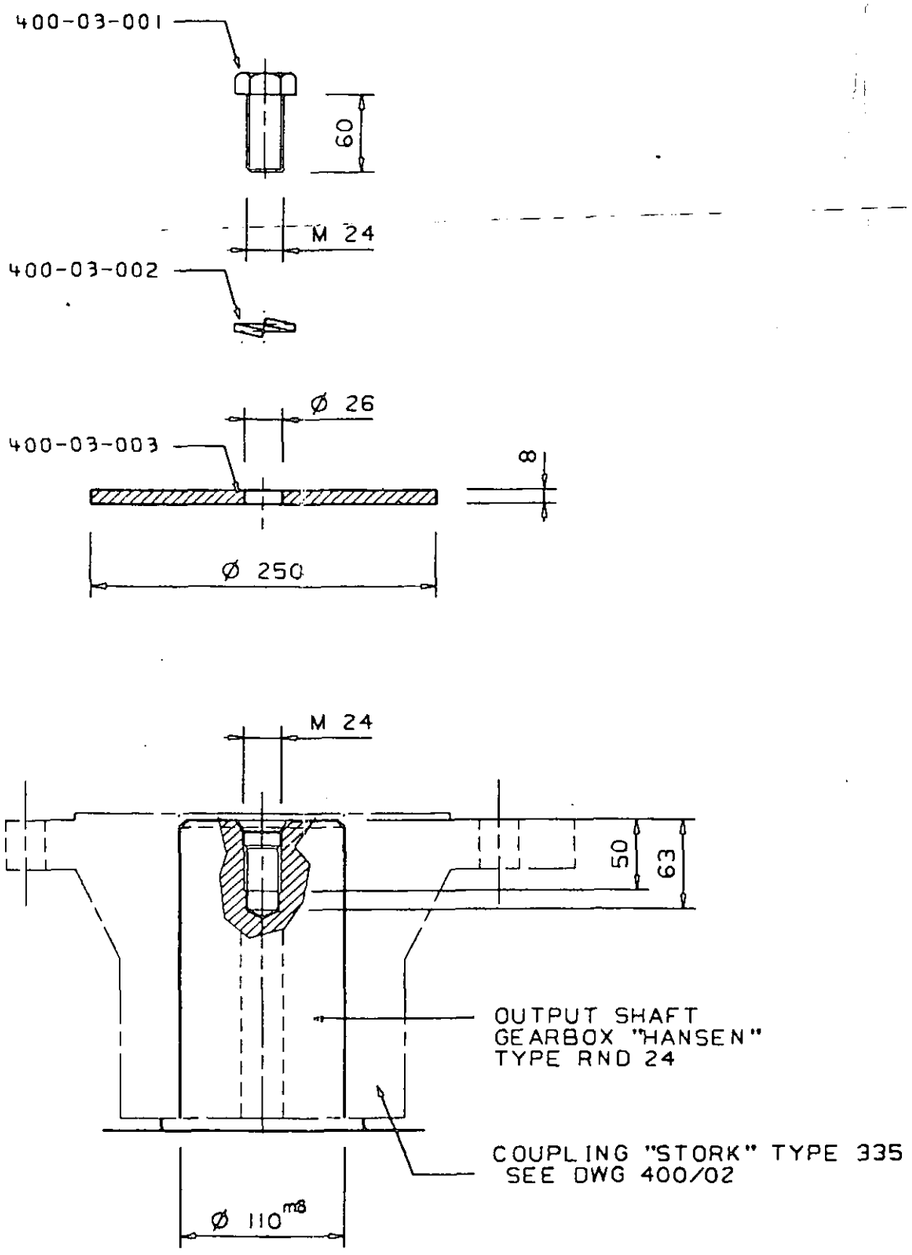

AS BUILT

CONFIRMED DOCUMENT

RESULT OF JGC'S REVIEW	JOB No. 0 6000
☐ REVIEWED WITHOUT COMMENT ☐ COMMENTED AS MARKED RESUBMISSION FOR FURTHER REVIEW IS ☐ NECESSARY BY ( ) ☐ NOT NECESSARY	REVIEWED BY / DATE DEPT. Name & Sign

NIOC DOC. No.	PO 06 - 1075 - DW054 - 2
JV(JGC) DOC. No.	PURCHSE ORDER No. V-215A-301-A / SERIAL 054 / SIZE A3 / REV. 2

REV.	DATE	DRAWN INIT	DRAWN PAR	CHECK INIT	CHECK PAR	APPR. INIT	APPR. PAR	CODE	REMARKS
02	31/08/93	DBK		DBK					AS BUILT
01	04/04/91	DEB		LEB					REV. ADDED ITEM N° (CT2204)
0	18/10/90	DEB		LEB					

PLANT: NATIONAL IRANIAN OIL COMPANY-IRAN
ARAK REFINERY
ITEM N° CT-2204 A/B-FA-1A/B/C/D

INDUCED DRAFT COOLING TOWER

ACCESSORIES OF FIXATION
COUPLING STORK

HAMON-SOBELCO S.A.
HAMON COOLING TOWER DIVISION
RUE CAPOUILLET, 50-58
1060 BRUXELLES - TELEX: 21822B SOBHAM B.
TF : 02/535.12.11

SCALE: NONE
SIZE: A3
FILE: HBC364200
CT-2204 A/B
DRAWING No: 400/03
REV.: 02

THIS DRAWING IS OUR PROPERTY. IT SHALL BE TREATED AS CONFIDENTIAL AND MUST NOT BE USED TO OUR DISADVANTAGE. IT SHALL BE NEITHER REPRODUCED NOR MADE AVAILABLE TO THIRD PARTIES WITHOUT OUR CONSENT. WE RESERVE THE RIGHTS ON ALL PATENTS GRANTED AND ON THE KNOW-HOW CONTAINED IN THIS DRAWING.

HBC364200 400/03 REV 02 01 2

ITEM	QUANT	DESCRIPTION	MATERIAL
400-03-001	8	SCREW M 24 X 60 DIN 933	AISI 304
400-03-002	8	LOCKWASHER M 24 DIN 127	AISI 304
400-03-003	8	PLATE WASHER 26/250 DIA TH 8	AISI 304

PART NAME : C.HBC364200.400.03

DRAWING BY COMPUTER GRAPHIC EQUIPMENT

D: 4428

415

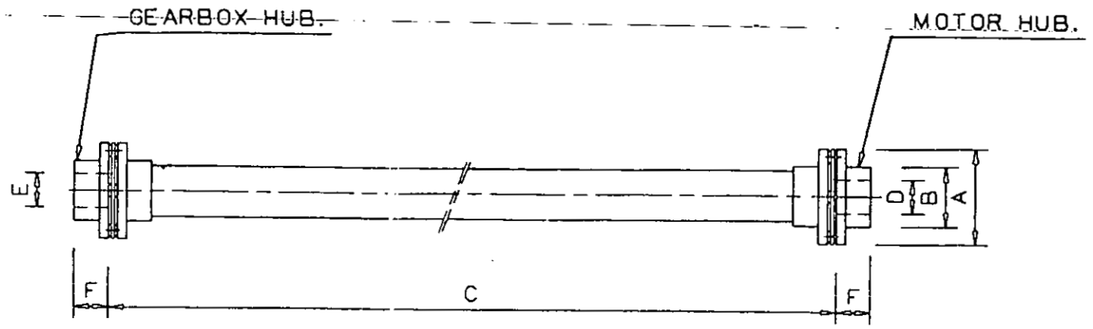

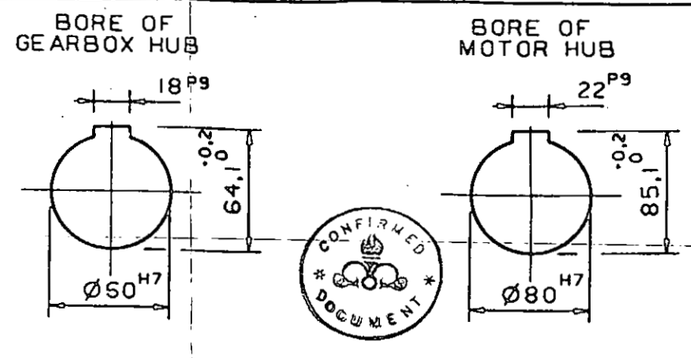

CONFIRMED DOCUMENT

FOR THE ORDER 8 SHAFTS ARE REQUIRED.

AS BUILT

MANUFACTURER: REXNORD

TYPE: 905-250

PROTECTION: GALVANIZED STEEL

ITEM.	DIMENSIONS	
A	225 Dia.	
B	156 Dia.	
C	4000	
D	80 Dia.	MOTOR SHAFT Dia.
E	60 Dia.	GEARBOX SHAFT Dia.
F	120	

RESULT OF JGC'S REVIEW — JOB No. 0 6 0 0 0

- ☐ REVIEWED WITHOUT COMMENT
- ☐ COMMENTED AS MARKED
- RESUBMISSION FOR FURTHER REVIEW IS
- ☐ NECESSARY BY ( )
- ☐ NOT NECESSARY

REVIEWED BY | DATE
DEPT.
Name & Sign

NIOC DOC. No. PO 06 - 1075 - DW056 - 2

JV(JGC) DOC. No. V-215A-301-A-056-A3-2 (PURCHSE ORDER No. / SERIAL / SIZE / REV.)

REV.	DATE	DRAWN INIT	DRAWN PAR	CHECK INIT	CHECK PAR	APPR. INIT	APPR. PAR	CODE	REMARKS
02	31/08/93	DBK		DBK					AS BUILT
01	04/04/91	DEB		LEB					REV. ADDED ITEM N° (CT-2204)
0	13/12/90	DEB		LEB					

PLANT: NATIONAL IRANIAN OIL COMPANY-IRAN
ARAK REFINERY
ITEM N° CT-2204 A/B-FA-1A/B/C/D

SCALE: NONE | SIZE: A3

INDUCED DRAFT COOLING TOWER
TRANSMISSION SHAFT
REXNORD TYPE : 905-250

FILE: HBC3642

HAMON-SOBELCO S.A.
HAMON COOLING TOWER DIVISION
RUE CAPOUILLET, 50-58
1060 BRUXELLES - TELEX: 21822B SOBHAM B.
TF : 02/535.12.11

CT 2204 A/B

THIS DRAWING IS OUR PROPERTY. IT SHALL BE TREATED AS CONFIDENTIAL AND MUST NOT BE USED TO OUR DISADVANTAGE. IT SHALL BE NEITHER REPRODUCED NOR MADE AVAILABLE TO THIRD PARTIES WITHOUT OUR CONSENT. WE RESERVE THE RIGHTS ON ALL PATENTS GRANTED AND ON THE KNOW-HOW CONTAINED IN THIS DRAWING.

DRAWING No: 400/05 | REV.: 02

HBC3642 400/05 02

REV 01 2

PART NAME : C.HBC364200.400.05

DRAWING BY COMPUTER GRAPHIC EQUIPMENT

417

GENERAL COMMENTS :

1. TERMINAL BOX FOR SPACE HEATER SHALL BE SHOWN.
2. MOTOR DATA SHEET & DETAILED TERMINAL BOX DWG. SHALL BE SUBMITTED.
3. CABLE SIZE AND CABLE ENTRY THREAD SIZE ARE AS FOLLOWS :

HI-SPEED
(2X3C-95 SQ MM
(2XM50X1,5 PITCH

LOW-SPEED
(3C-25 SQ MM
(M32X1,5 PITCH

SPACE HEATER
(2C-4 SQ MM
(M25X1,5 PITCH

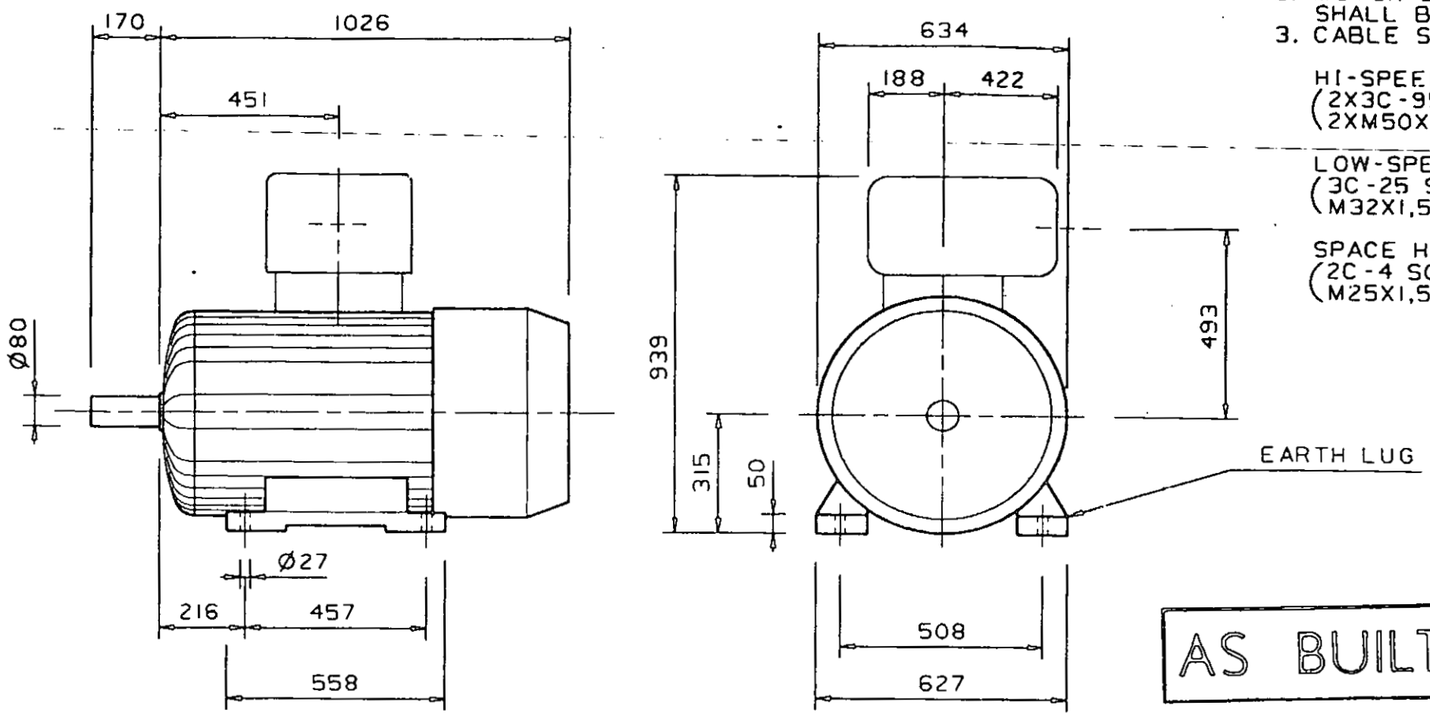

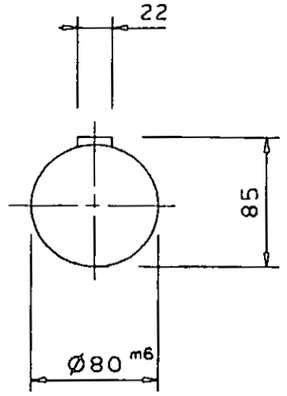

MOTOR ITEM NO.

CT-2204A-MA/MB/MC/MD
CT-2204B-MA/MB/MC/MD

FOR THIS ORDER 8 MOTORS ARE REQUIRED.

MANUFACTURER: ABB
TYPE: D20L/MEDL 315M 4/8
FORME: B3
NOM. POWER: 90/15Kw.
SPEED: 1500/750rpm.

VOLTAGE: 400v.
PROTECTION: IP55 EEXD
GAS GROUP D (FLAME PROOF)
INSULATION CLASS: F
FREQUENCY: 50Hz.

AS BUILT

CONFIRMED DOCUMENT

RESULT OF JGC'S REVIEW	JOB No. 0 6000
☐ REVIEWED WITHOUT COMMENT ☐ COMMENTED AS MARKED RESUBMISSION FOR FURTHER REVIEW IS ☐ NECESSARY BY ( ) ☐ NOT NECESSARY	REVIEWED BY / DATE DEPT. Name & Sign

NIOC DOC. No.	PO 06 - 1075 - DW057 - 3
JV(JGC) DOC. No.	PURCHSE ORDER No. V215A301 - SERIAL A057 - SIZE A3 - REV. 3

REV.	DATE	INIT	PAR	INIT	PAR	INIT	PAR	CODE	REMARKS
		DRAWN		CHECK		APPR.			
02	31/08/93	DBK		DBK					AS BUILT
01	04/04/91	DEB		LEB					REV.A BECOMES REV.01 · GEN. COM.
A	16/01/91	DEB		JNH					ADDED GEN. COMMENTS & MOTOR ITEM
0	18/12/90	DEB		LEB					

PLANT: NATIONAL IRANIAN OIL COMPANY-IRAN
ARAK REFINERY
ITEM N°. CT-2204 A/B-FA-1A/B/C/D

INDUCED DRAFT COOLING TOWER
MOTOR ABB
TYPE : D20L/MEDL 315M

HAMON-SOBELCO S.A.
HAMON COOLING TOWER DIVISION
RUE CAPOUILLET,50-58
1060 BRUXELLES-TELEX:218228 SOBHAM B.
TF : 02/535.12.11

SCALE: NONE
SIZE: A3
FILE: HBC3642
CT-2204 A/B

THIS DRAWING IS OUR PROPERTY. IT SHALL BE TREATED AS CONFIDENTIAL AND MUST NOT BE USED TO OUR DISADVANTAGE. IT SHALL BE NEITHER REPRODUCED NOR MADE AVAILABLE TO THIRD PARTIES WITHOUT OUR CONSENT. WE RESERVE THE RIGHTS ON ALL PATENTS GRANTED AND ON THE KNOW-HOW CONTAINED IN THIS DRAWING.

DRAWING No: 400/06
REV.: 02

HBC3642 400/06 02
REV 01 2

DRAWING BY COMPUTER GRAPHIC EQUIPMENT

PART NAME : C.HBC364200.400.06

418

0:4428

271

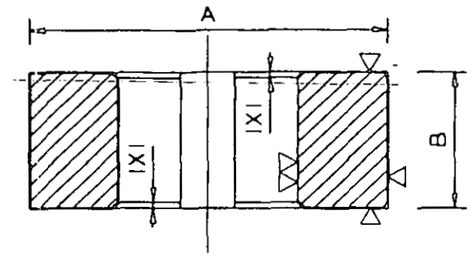

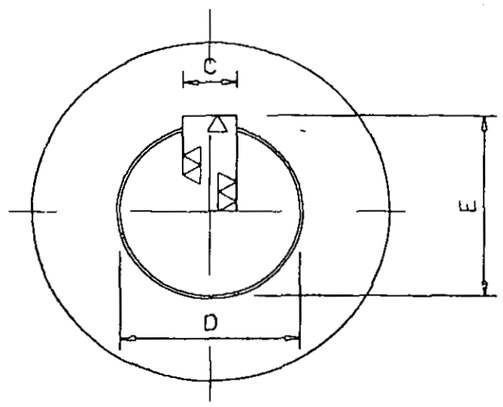

MATERIAL: GG 25 (ASTM A48 cl 35 B)

PROTECTION: MASHINED FACES VARNISH
COUNTER RUST

ITEM	QUAN	A	B $^{0}_{+0.1}$	C $^{0}_{+0.1}$	D $^{+0.1}_{+0.3}$	E $^{0}_{+0.2}$
400/07/001	8	Ø156	20	18	Ø60	64,1
400/07/002	8	Ø156	50	22	Ø80	85,1

400/07/001 : BORE OF GEARBOX STRUT

400/07/002 : BORE OF MOTOR STRUT

PART NAME : C.HBC364200.400.07

CONFIRMED DOCUMENT

AS BUILT

RESULT OF JGC'S REVIEW	JOB No. 0 6000
☐ REVIEWED WITHOUT COMMENT ☐ COMMENTED AS MARKED RESUBMISSION FOR FURTHER REVIEW IS ☐ NECESSARY BY ( ) ☐ NOT NECESSARY	REVIEWED BY / DATE DEPT. Name & Sign

NIOC(T) NIOC(Y) TPL(R) TPL(Y) エネルギー (住宅) 水処理 廃水処理 システム 分析 空調 消防設備 PE1 機械 PE1 電気 (自家) PE1 計装 PE2 パッケージ PE2 ボイラー PE2 ボイラー 給水 PE2 消火 PE2 冷凍 PE2 空調 ソーダ 電気2 計装1 DC-CP PJ PJ CONT プロジェクト (機械-L) CONST(Y) CONST(A) TPIA

NIOC DOC. No. PO 06 - 1075 - DW058 - 3

JV(JGC) DOC. No. V-215A-301-A-058-A3-3 (PURCHSE ORDER No. / SERIAL / SIZE / REV.)

REV.	DATE	INIT	PAR	INIT	PAR	INIT	PAR	CODE	REMARKS
		DRAWN		CHECK		APPR.			
03	31/08/93	DBK		DBK					AS BUILT
02	20/12/91	DBK		DEB					RESULT OF JGC'S REVIEW
01	04/04/91	DEB		LEB					REV. ADDED ITEM N° CT-2204
0	19/11/90	DEB		LEB					

PLANT: NATIONAL IRANIAN OIL COMPANY-IRAN
ARAK REFINERY
ITEM N° CT-2204 A/B-FA-1A/B/C/D

SCALE: NONE

SIZE: A3

INDUCED DRAFT COOLING TOWER

RING STRUTS

FILE: HBC3642

HAMON-SOBELCO S.A.
HAMON COOLING TOWER DIVISION
RUE CAPOUILLET,50-58
1060 BRUXELLES-TELEX:21822B SOBHAM B.
TF : 02/535.12.11

CT-2204 A/B

THIS DRAWING IS OUR PROPERTY. IT SHALL BE TREATED AS CONFIDENTIAL AND MUST NOT BE USED TO OUR DISADVANTAGE. IT SHALL BE NEITHER REPRODUCED NOR MADE AVAILABLE TO THIRD PARTIES WITHOUT OUR CONSENT. WE RESERVE THE RIGHTS ON ALL PATENTS GRANTED AND ON THE KNOW-HOW CONTAINED IN THIS DRAWING.

DRAWING No: 400/07

REV.: 03

DRAWING BY COMPUTER GRAPHIC EQUIPMENT

HBC3642 400/07 03

REV 2 3

D: 4428